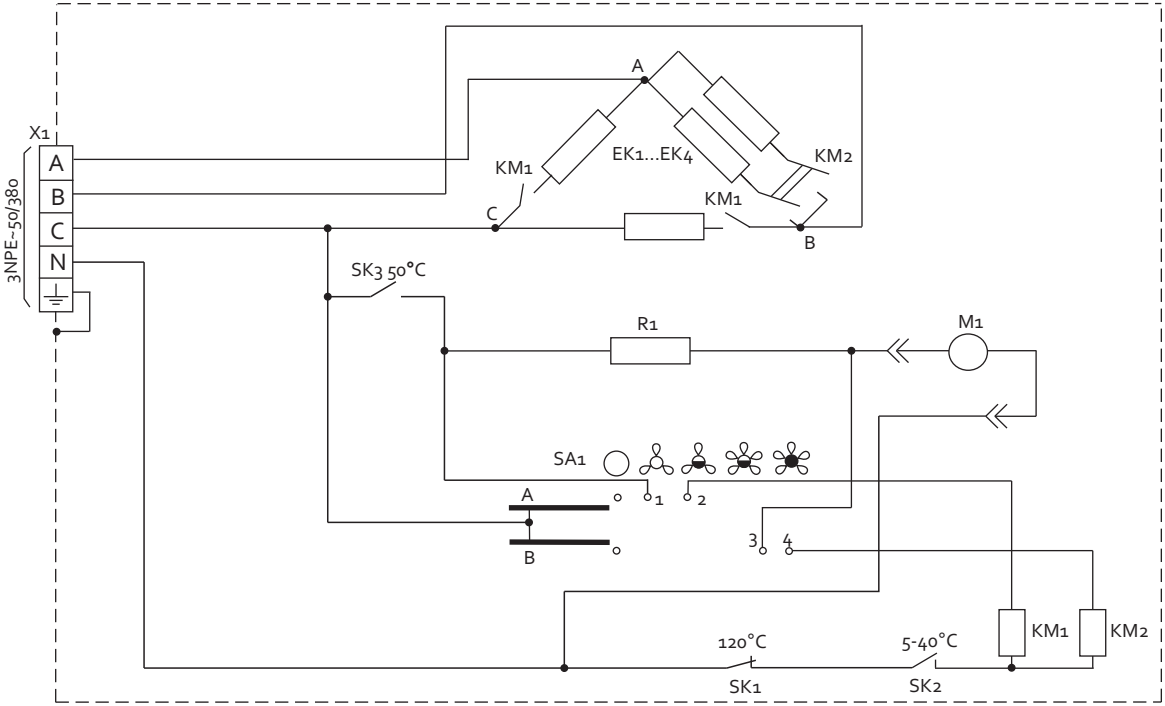
X1
A
B
C
N
3NPE~50/380
A
KM1
EK1...EK4
KM2
KM1
C
B
SK3 50°C
R1
M1
SA1
1
2
A
B
3
4
KM1
KM2
120°C
SK1
5-40°C
SK2